AD/BELL 212/3 Amdt 5 — Main Rotor Blades - Eddy Current Inspection — 12/84

Applicability: All models with main rotor blades P/N 204-012-001.

Requirement:

1. Inspect the upper and lower surface of each blade by means of an approved low frequency eddy current technique in order to detect fatigue cracking in the blade spar prior to its propagation into the skin material. The areas to be inspected are the upper and lower sections of the spar extending forward approximately 0.5 inches and along a line approximately 4.0 inches, from the rear vertical face. As far as is practicable and excluding the inboard end doubler and tip weight areas, the complete length of each blade is to be covered.

   Note: Eddy Current Technique ATG/NDI/EC3 is approved for this inspection.

2. By means of an approved eddy current technique inspect the main rotor blade upper and lower skins between the spar and the trailing edge member for fatigue cracking. Two approximately equally spaced scans are required on each surface.

Compliance: Prior to achieving 300 hours component time in service and thereafter at intervals not exceeding 25 hours component time in service.

Background: This Directive has been revised to exclude the later model glass fibre belted blades from the requirement.

Australian Government

Civil Aviation Safety Authority

NDT PROCEDURE: Bell 212 Main Rotor Blades

PROCEDURE NO: **ATG/NDT/EC/3**

TEST METHOD: EDDY CURRENT TESTING

AMENDMENT NO: TWO (2)

DATE: 31 MARCH, 2005

PAGE: 1 of 7

	NAME	SIGNATURE	DATE
Approved By	N Joiner		31/03/2005
CAR 2A Delegate	D. PAYNE		13 MAY 2005

CONTENTS

PURPOSE	3
PREPARATION	3
REFERENCE DOCUEMENTS	3
PRE INSPECTION REQUIREMENTS	3
PERSONNEL	3
EQUIPMENT	3
CALIBRATION SAMPLES	3
PROCEDURE	4
ACCEPTANCE CRITERIA	4
WORKSHEETS	5
REPORTING	5
FIGURE 1	6
FIGURE 2	7

1.0 PURPOSE

The purpose of this inspection is to detect the presence of fatigue damage in the main rotor blade spar prior to its propagation to the skin material.

The area to be inspected comprises that section of the front spar, top and bottom surfaces, extending forward approximately 12.5mm in from the rear vertical face and over a length extending from 900mm to 4.8m measured from the tip of the rotor.

2.0 PREPARATION

2.1 Thoroughly clean the area to be inspected.

3.0 REFERENCE DOCUMENTS

3.1 AD / Bell 212/3 – Main Rotor Blades, Eddy Current Inspection

4.0 PRE INSPECTION REQUIREMENTS

Isolate the engine and cockpit for the duration of the inspection.

5.0 PERSONNEL

Personnel performing this inspection must be approved by Civil Aviation Safety Authority or their approved delegated signatory within the Maintenance Organisation.

6.0 EQUIPMENT

This procedure was developed using the Automation Industries model EM1500, however any other equipment meeting the performance characteristics of this procedure shall be considered acceptable. Phase analysis is considered superior to the EM1500 and may also be used for this inspection. The suitability of alternative equipment shall be assessed by a qualified NDT Level III specialist.

6.1 Automation Industries type EM1500 Eddy Current equipment together with a 1 kHz frequency module and low frequency probe and reference module.

7.0 CALIBRATION SAMPLES

7.1 A test sample constructed from a section of rotor blade as shown in Figure 1

8.0 PROCEDURE

8.1 Place a straightedge on the test sample so that its edge coincides with the interface between the aluminium alloy skin and the stainless steel abrasion strip. Place the probe on the sample and in contact with the straightedge at a position remote from the EDM slot in the spar. This will result in the edge of the working part of the probe being directly over the rear vertical face of the spar as shown in Figure 2.

Note: *If a probe of face dimensions other than those shown in Figure 2 is used, the position of the straightedge must be adjusted to 'provide the same probe position relative to the spar.*

8.2 Adjust the instrument controls to achieve balance adjust for lift-off as described in the Instrument Instruction Manual.

8.3 Adjust the instrument sensitivity control so that a full-scale meter deflection results as the probe is traversed over the slot in the spar.

8.4 Place the probe on the blade to be inspected in the same chord wise position as that achieved relative to the test sample and traverse it over the span wise extent of the blade from 900mm to 4.8m measured from the tip of the rotor.

Note: *The chord wise position of the probe must be kept constant either by the use of a straightedge or by using a jig constructed to maintain the probe position relative to the leading edge of the blade.*

9.0 ACCEPTANCE CRITERIA

9.1 Any meter deflection similar in character to and of equal or greater amplitude than that obtained from the slot in the test sample must be suspected as being indicative of the presence of a crack.

9.2 Crack indications will be characterised by a sharp rise and fall of the meter reading similar to that obtained with a similar probe movement relative to the slot in the test sample. This enables discrimination of crack indications from the gradual meter deflections that result from minor structural and material variations.

9.3 A relatively sharp meter deflection will be obtained at a point approximately 1.473m from the blade tip. This results from a change in the material of the abrasion strip from stainless steel to a cobalt alloy. It will be found that the meter deflection at this point is not characteristic of a crack indication, being unidirectional relative to probe movement.

10.0 WORKSHEETS

Worksheets shall include the following information:

Name of testing laboratory
Client
Report Number
Test technique
Aircraft Registration Number
Rotor Blade Serial No. (If applicable)
Acceptance Standard
Statement of compliance
Date of test
Identity of test personnel
Test location

11.0 REPORTING

Reporting requirements shall be satisfied by a test report containing the following information:
Name of testing laboratory
Identification of the eddy current testing equipment
Aircraft Registration Number
Rotor Blade Serial No. (If applicable)
Reference to this procedure any variation of the method imposed
Identity of test personnel
Date of examination
Location of test
Results of test
Report Number and date of issue
Sketches of defect locations when appropriate

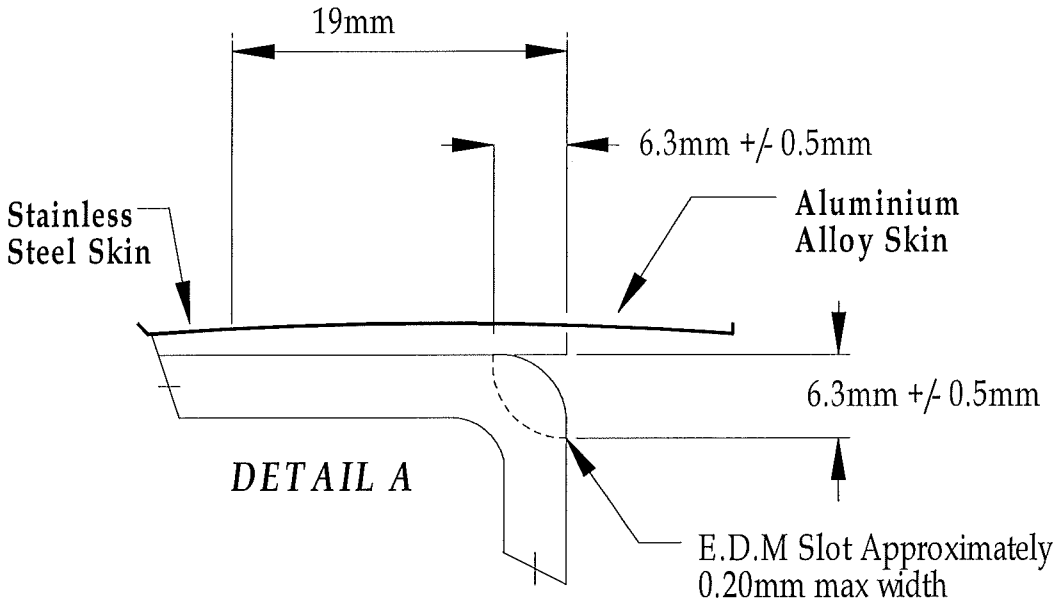

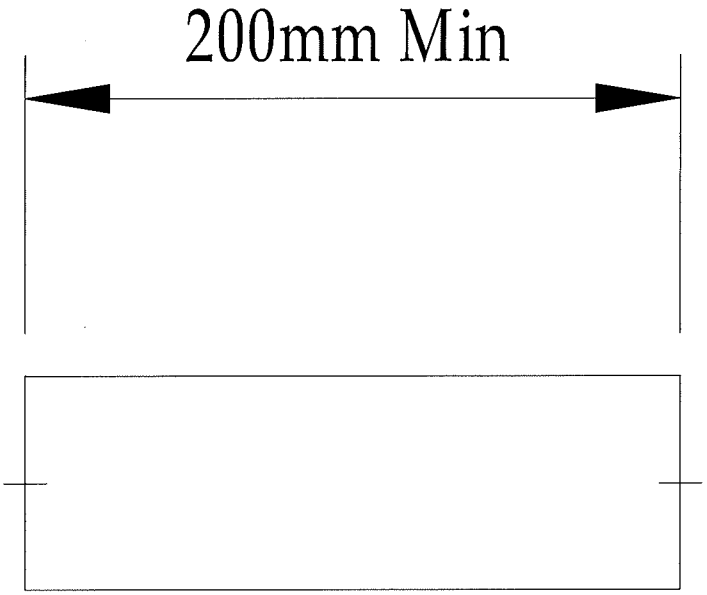

(Test Sample Manufactured from Section of Blade)

FIGURE 1

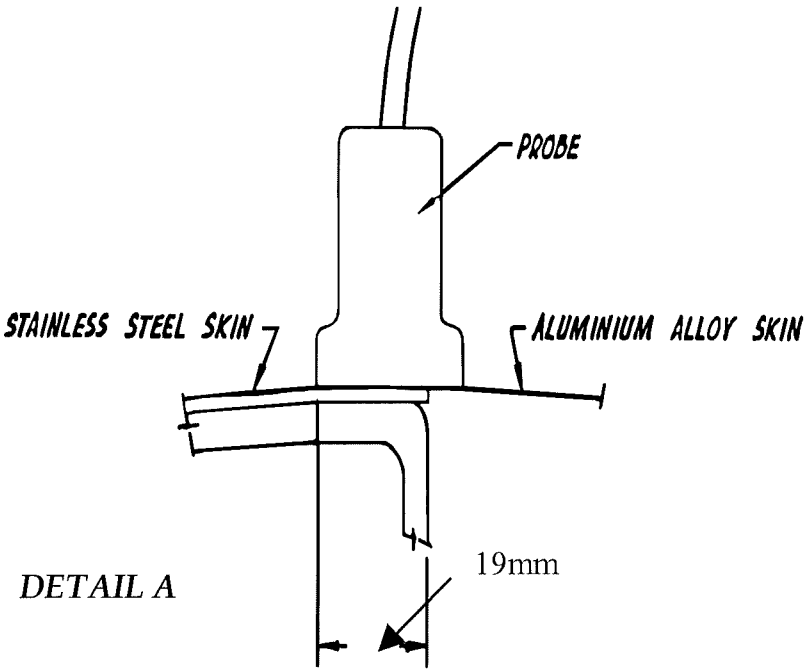

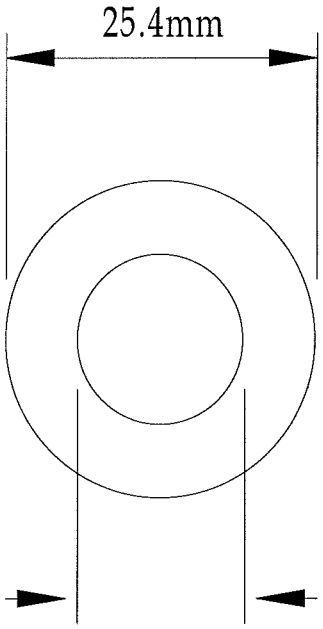

PROBE DIMENSIONS

(Probe Position)

FIGURE 2