AIRWORTHINESS DIRECTIVE

On the effective date specified below, and for the reasons set out in the background section, the CASA delegate whose signature appears below repeals Airworthiness Directive (***AD***) AD/ELECT/74 and issues the following AD under subregulation 39.001 (1) of CASR 1998 and subsection 33 (3) of the *Acts Interpretation Act 1901*. The AD requires that the action set out in the requirement section (being action that the delegate considers necessary to correct an unsafe condition) be taken in relation to the aircraft or aeronautical product mentioned in the applicability section: (a) in the circumstances mentioned in the requirement section; and (b) in accordance with the instructions set out in the requirement section; and (c) at the time mentioned in the compliance section.

Electrical Equipment

AD/ELECT/74 Lermer GmbH Water Boilers 9/2014 AMDT 1

Applicability: This AD applies to Lermer GmbH (previously Lermer) water boilers with any of the following:

(a) Part Number L13471, L13471-05, L13471-11 or L13471-19;

(b) Type Number 1010099-6, 1010099-10, 1010099-6.1 or 1010099-6.2.

However, this AD does not apply to water boilers that have been engraved with either:

(a) one of the following Airbus Service Bulletin (***SB***) numbers: A300-25A0474, A310-25A2146, A300-25A6170, A320-25A1299, A330-25A3174, A340-25A4192; or

(b) the words ‘Complies with AD F-2004-132’.

Note 1: These water boilers are known to be installed on, but not limited to, Airbus A300, A310, A300-600, A318, A319, A320, A321, A330 and A340 series aeroplanes.

Requirement: Get access to the water boiler in accordance with the applicable aircraft maintenance manual and identify the water boiler. If a water boiler bears one of the following Lermer Part Numbers or Type Numbers:

(a) Part Number L13471, L13471-05, L13471-11 or L13471-19;

(b) Type Number 1010099-6, 1010099-10, 1010099-6.1 or 1010099-6.2;

carry out the following:

(a) check the logo on the identification plate at the rear side of the water boiler (see fig 1). If the new DRIESSEN logo exists, no further action is required;

(b) if the old Lermer logo exists, inspect the overheat protection of the water boiler in accordance with Lermer GmbH CMM 25-30-31 page block 300;

Electrical Equipment

AD/ELECT/74 Amdt 1 (continued)

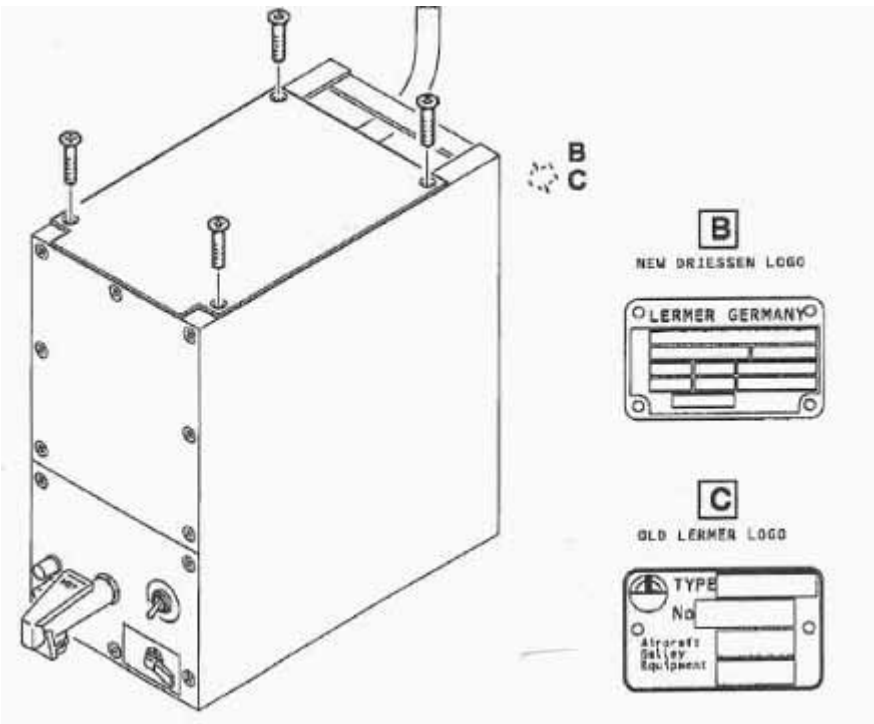

Fig 1 - Lermer Water Boiler

(c) if four or more electrical terminals are connected, engrave adjacent to the equipment label 'Complies with AD F-2004-132';

(d) if less than four electrical terminals are connected, scrap the water boiler and install an airworthy one.

For Airbus aeroplanes, embodiment of the following applicable SB is considered an acceptable mean of compliance for the requirements of this AD:

A300-25A0474	A300-25A6170	A330-25A3174
A310-25A2146	A320-25A1299	340-25A4192.

*Note 2: Direction Générale de l'Aviation Civile of France (**DGAC**) AD F-2004-132 refers.*

Compliance: The action set out in the Requirement section must be taken before 31 December 2004.

The effective date of this AD is 5 May 2014.

Background: DGAC advised that an A330 aircraft made an in-flight turn back due to overheat of a galley water boiler.

Electrical Equipment

AD/ELECT/74 Amdt 1 (continued)

Investigations revealed that some of the Lermer water boilers listed above have a deficiency in the electrical circuit design. In fact, the overheat protector may be installed in serial with the relay control and in case of relay contact sticking, the continuous source of power to the heating element cannot be cut. This situation may lead to the emission of a burning smell together with smoke and possible injury to the aeroplane's occupants.

In response to this situation, CASA issued AD/ELECT/74 dated 5 August 2004 to require the inspection of applicable water boilers. Water boilers with overheat protection having less than 4 electrical terminals are discarded; those with 4 or more electrical terminals are marked as having been inspected and returned to service.

CASA issued AD/ELECT/74 Amdt 1 to correct a typographical error in the DGAC AD number referenced in Note 2 of this AD. There are no changes to the technical requirements of the AD and the dates for compliance remain unchanged.

Mike Higgins
Delegate of the Civil Aviation Safety Authority

28 April 2014